Exam Date & Time: 13-Dec-2022 (02:30 PM - 05:30 PM)

MANIPAL ACADEMY OF HIGHER EDUCATION

THIRD SEMESTER B.TECH. (ELECTRONICS AND COMMUNICATION ENGINEERING)
EXAMINATIONS - DECEMBER 2022
SUBJECT : ECE 2154 - NETWORK ANALYSIS

NETWORK ANALYSIS [ECE 2154]

Marks: 50 **Duration: 180 mins.**

A

Answer all the questions.

1A) Consider the circuit of Figure. 1A.
a. Determine the current in the load resistor, RL using the Superposition theorem.
b. Verify that the superposition theorem does not apply to power. (4)

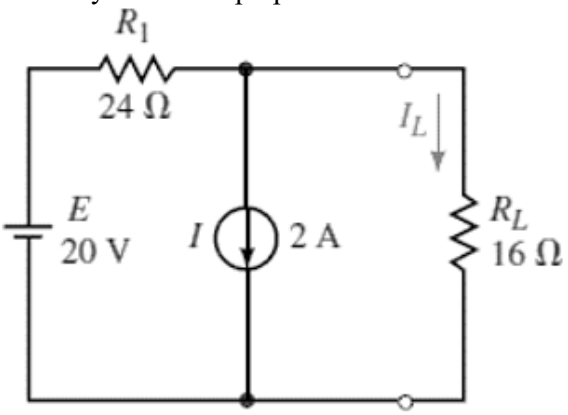

Figure. 1A

1B) Convert the voltage source of Figure 1B. into a current source and verify that the current, IL, through the load is the same for each source. (3)

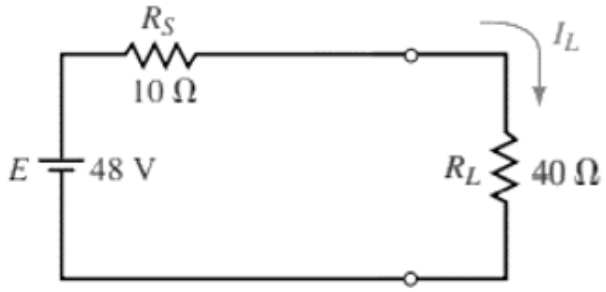

Figure 1B

1C) (3)

For the network shown in Figure 1C., Find v_1, v_2, v_3 *and* v_4.

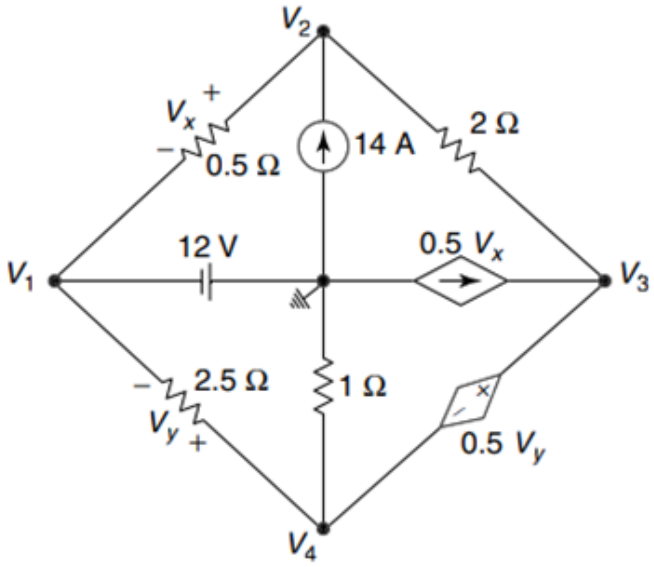

Figure 1C

2A) In the network shown in Figure 2A, the switch is closed at t = 0, with zero capacitor voltage and zero inductor current.
Solve for v_1, v_2 and dv_2/dt at $t = 0^+$. (4)

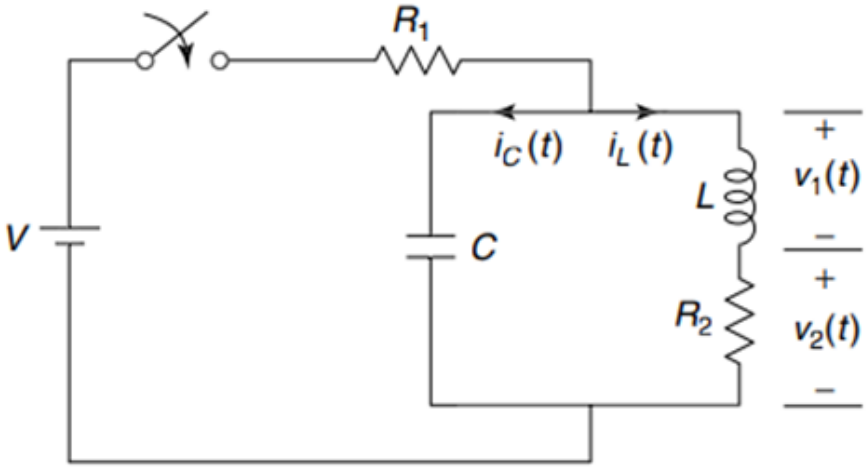

Figure 2A

2B) In the network shown in Figure 2B, a steady state is reached with the switch open. At t = 0, the switch is closed. For the element values given, determine the values of (3)

$V_a(0^-), V_a(0^+), V_b(0^-)$ *and* $V_b(0^+)$.

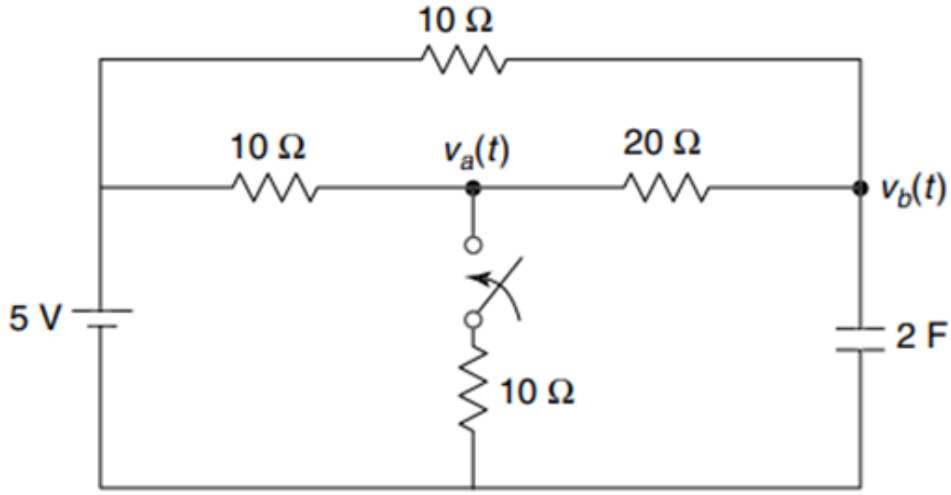

Figure 2B

2C) In the network shown in Figure 2C, find $v_o(t)$ if $i(0) = 5\ A$ and $v(t) = 0$.

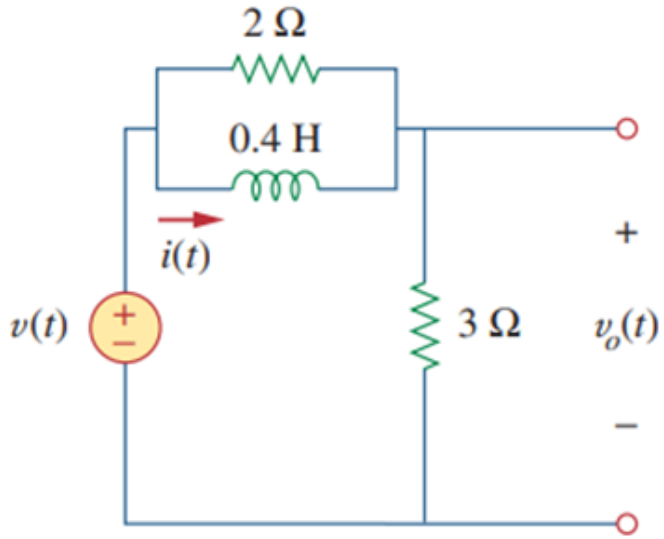

(3)

Figure 2C

3A) A symmetrical square wave of amplitude ±5V and frequency 3kHz is impressed on an RC low pass circuit. If R = 6kΩ and C = 0.2μF, calculate and plot the steady state output with respect to time. (4)

3B) A pulse of 10V amplitude and duration 1ms is applied to a high pass RC circuit with R = 20kΩ and C = 0.7μF. Plot the output waveform to scale and calculate the percent tilt in the output. (3)

3C) A symmetrical square wave whose average value is zero has a peak-to-peak amplitude of 25V and a period of 4μs. This waveform is applied to a circuit whose upper 3dB frequency is 1/2π MHz. Calculate and sketch the steady state output waveform. In particular what is the peak to peak output amplitude. (3)

4A) For the network shown in the Fig. 4A, the switch is closed at t = 0. Determine the current i(t) assuming zero initial conditions using Laplace Transform. (4)

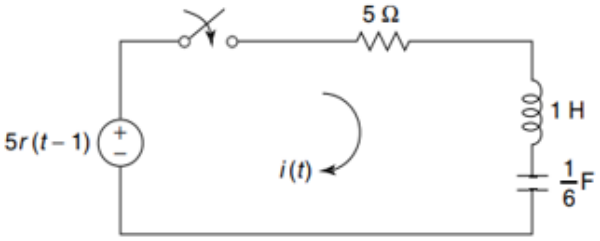

Fig. 4A

4B) For the network shown in the Fig. 4B, find the response $v_0(t)$ using Laplace Transform.

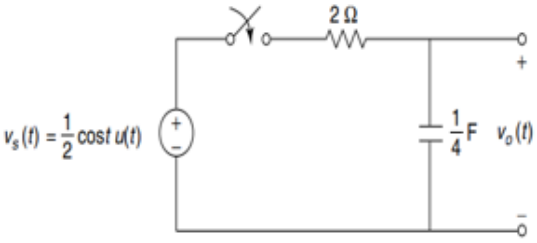

(3)

Fig. 4B

4C) For the network shown in the Fig. 4C, determine the current i(t) when the switch is closed at t=0 with zero initial conditions using Laplace Transform.

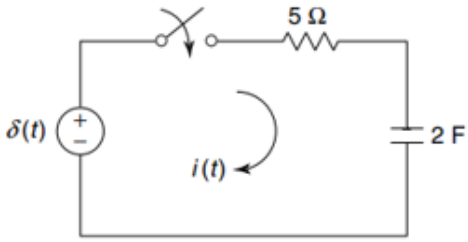

(3)

Fig. 4C

5A) Find the y parameters for the circuit shown in Figure 5A.

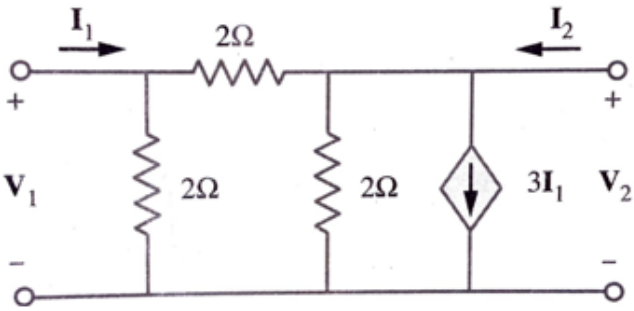

(4)

Figure 5A

5B) (3)

Find the network function $\frac{V_2}{V_1}$ for the network shown in Figure 5B.

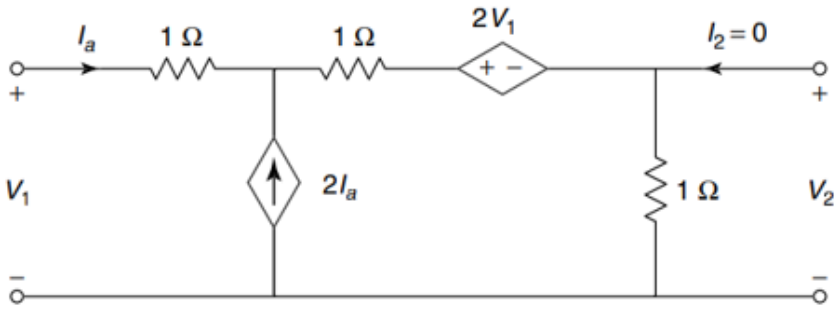

Figure 5B

5C) Derive the expression for z parameters in terms of y parameters. (3)

-----End-----